Furniture Link

Esme Storage Bed

ASSEMBLY INSTRUCTIONS

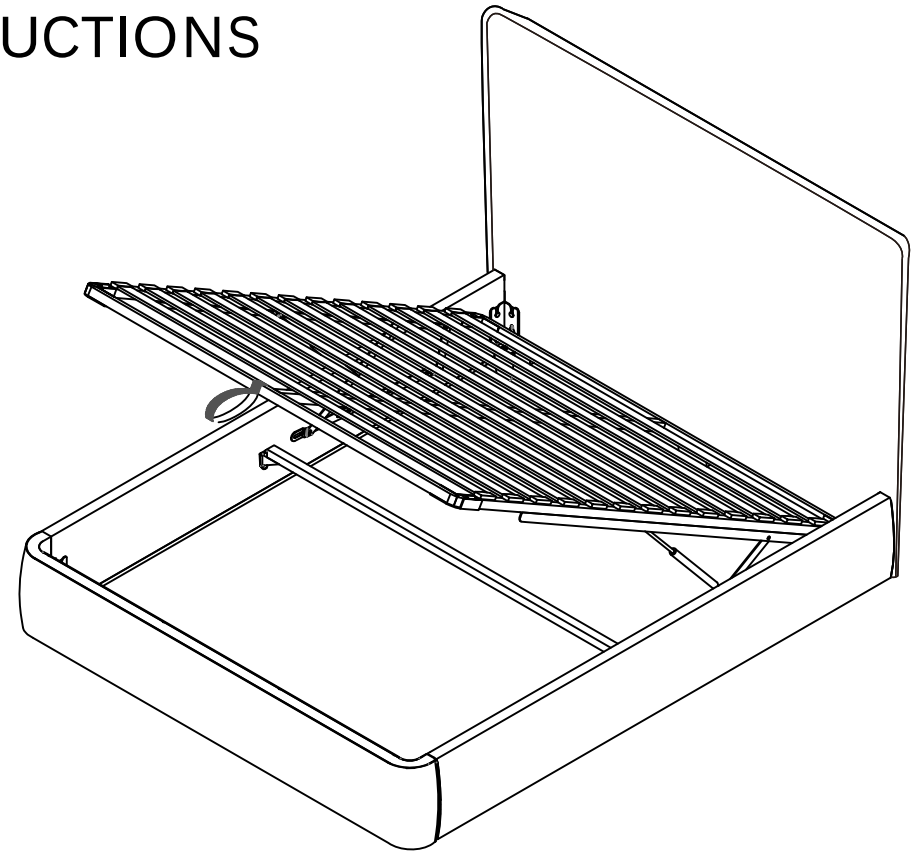

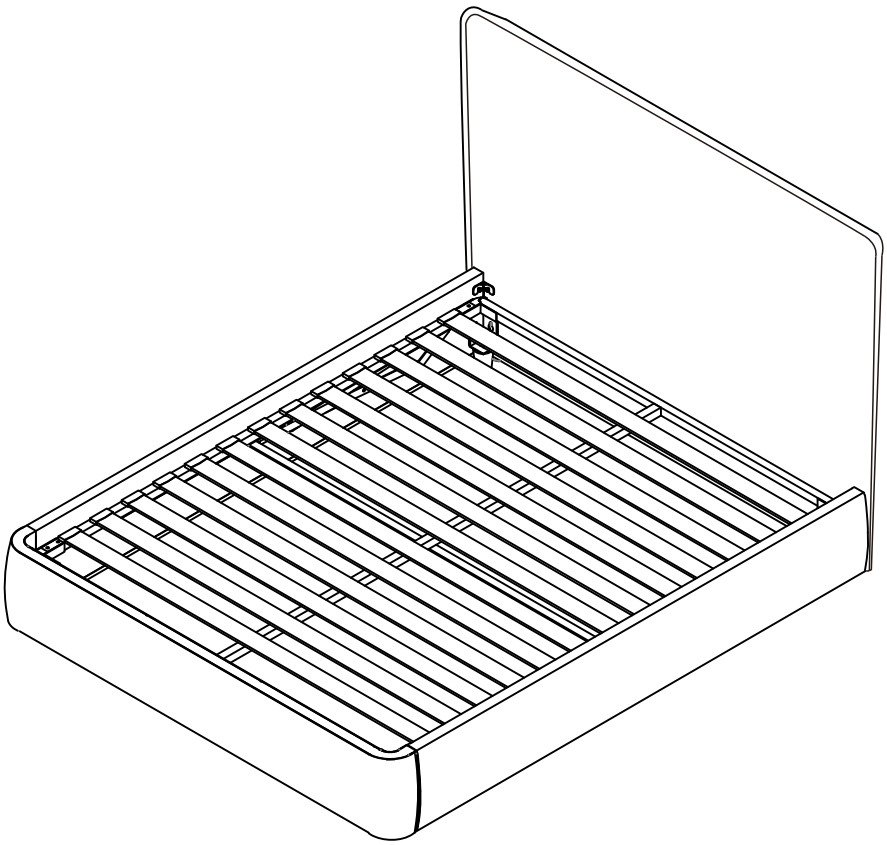

GENERAL INFORMATION

Please read this guide before assembling the bed and using for the first time.

- Please familiarise yourself with the various stages of construction before you start.
- Carefully open the packaging and check the contents against the parts and fittings check list.
- In the unlikely event you find any missing or damaged parts or pieces, please contact the retailer quoting the part code / name.
- Do not assemble the product if parts are missing.
- Please retain this assembly instruction and tools provided for future use.
- Assemble the bed in the location it is intended for use.
- Never drag or try to move a fully assembled bed, always take apart if you need to relocate the bed.
- Prior to first use, and when fully assembled and with the mattress in position, raise & lower the ottoman 4 or 5 times to ensure the gas pistons are fully lubricated.

GAS LIFT MECHANISM ASSEMBLY

- Ensure the piston is fitted the correct way round. Thick black cylinder at the top, narrow metal rod towards the floor.
- When connecting the hinge mechanism to the slatted bed base, ensure the slatted frame is positioned as close to the headboard end as the slots around the bolt fittings allow. This will provide a wider gap between the frame and the foot end.

CAUTION

There are small components used in the construction of this unit. These components should be kept away from young children during assembly, to avoid the danger of choking.

CARE AND MAINTENANCE

- Do not overload the storage compartment. Overfilling the space could damage the bed or the items you are storing within it.
- Periodically check all fixings are tight.
- To clean, wipe down the bed frame using a slightly damp cloth.

SAFETY WARNING

- The maximum weight mattress that can be used on this bed is shown below and displayed on a label fixed to the foot end of your bed.

Mattress Weight Must NOT Exceed		
Double	4'6"	56kg
King	5'0"	65kg
Superking	6'0"	65kg

- Using a mattress above this weight could cause the product to fail and lead to injury.
- Always use two hands when raising or lowering the ottoman storage compartment.
- When lowering the ottoman storage compartment, ensure you are physically able to take the weight of the frame and mattress at the point when the resistance of the gas lift mechanism is relieved.

RISK OF ENTRAPMENT

- Open and close the bed using the correct hand placement as shown in these instructions and the labels on the bed frame.
- Keep hands and fingers clear of the side mechanism when closing.
- Ensure no other person is on or near the bed when opening or closing.
- DO NOT ALLOW CHILDREN TO PLAY WITH, OR OPERATE THE BED.

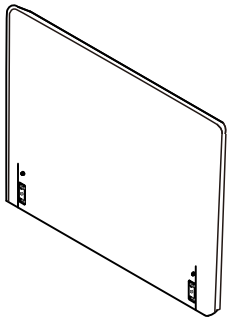

①x1

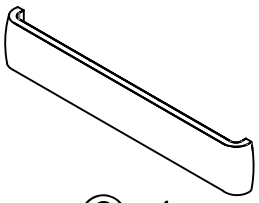

②x1

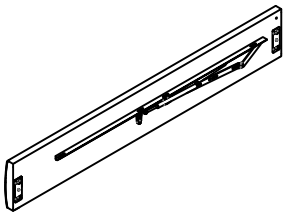

③x1

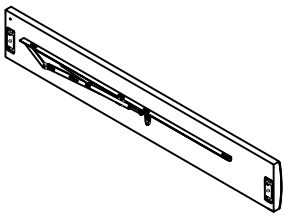

④x1

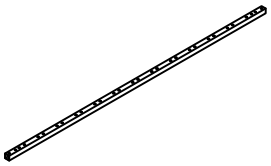

⑤x2

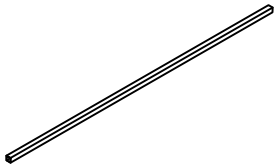

⑥x1

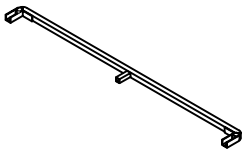

⑦x2

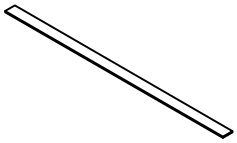

⑧x15 /14

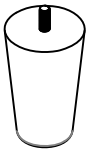

⑨x4

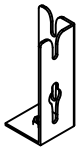

⑩x4

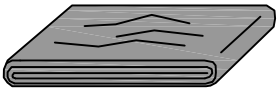

⑪x1

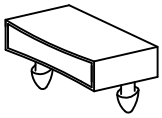

⑫x30 /28

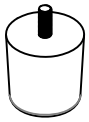

⑬x2

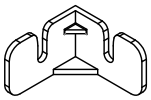

⑭x2

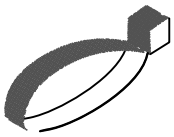

⑮x1

⑯x1

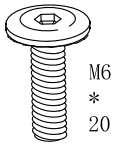

Ax8

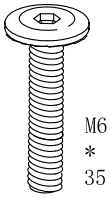

Bx8

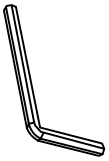

Cx1

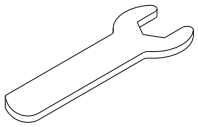

Dx1

1

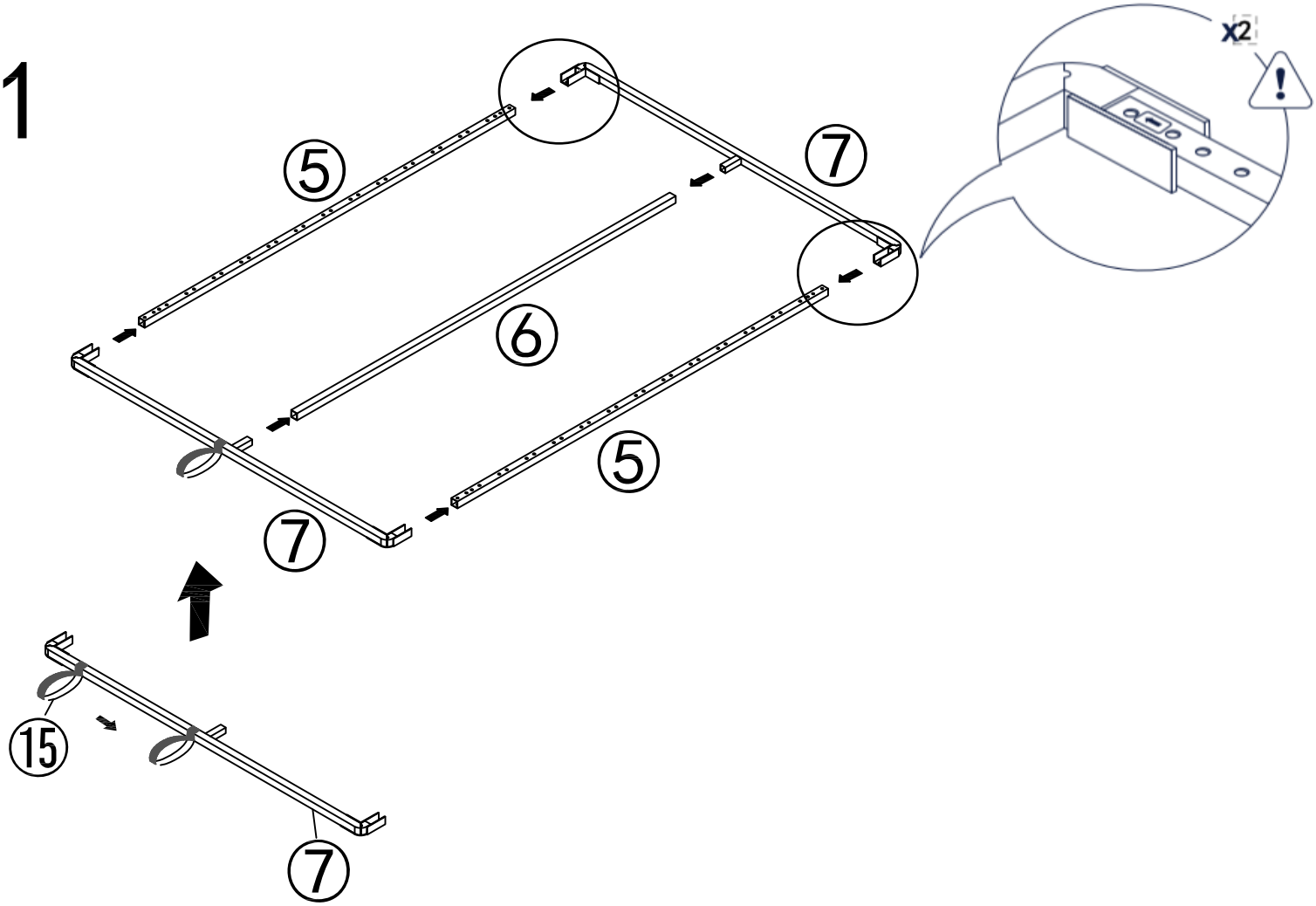

2

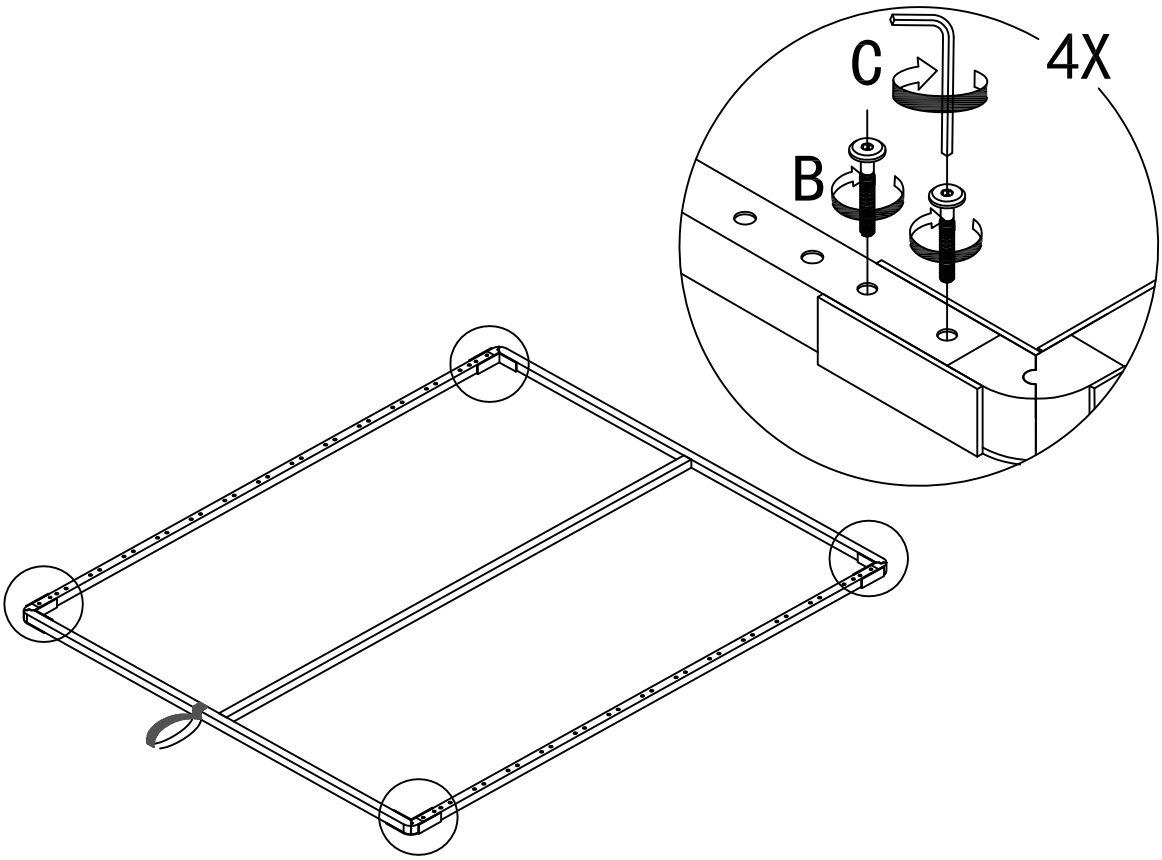

3

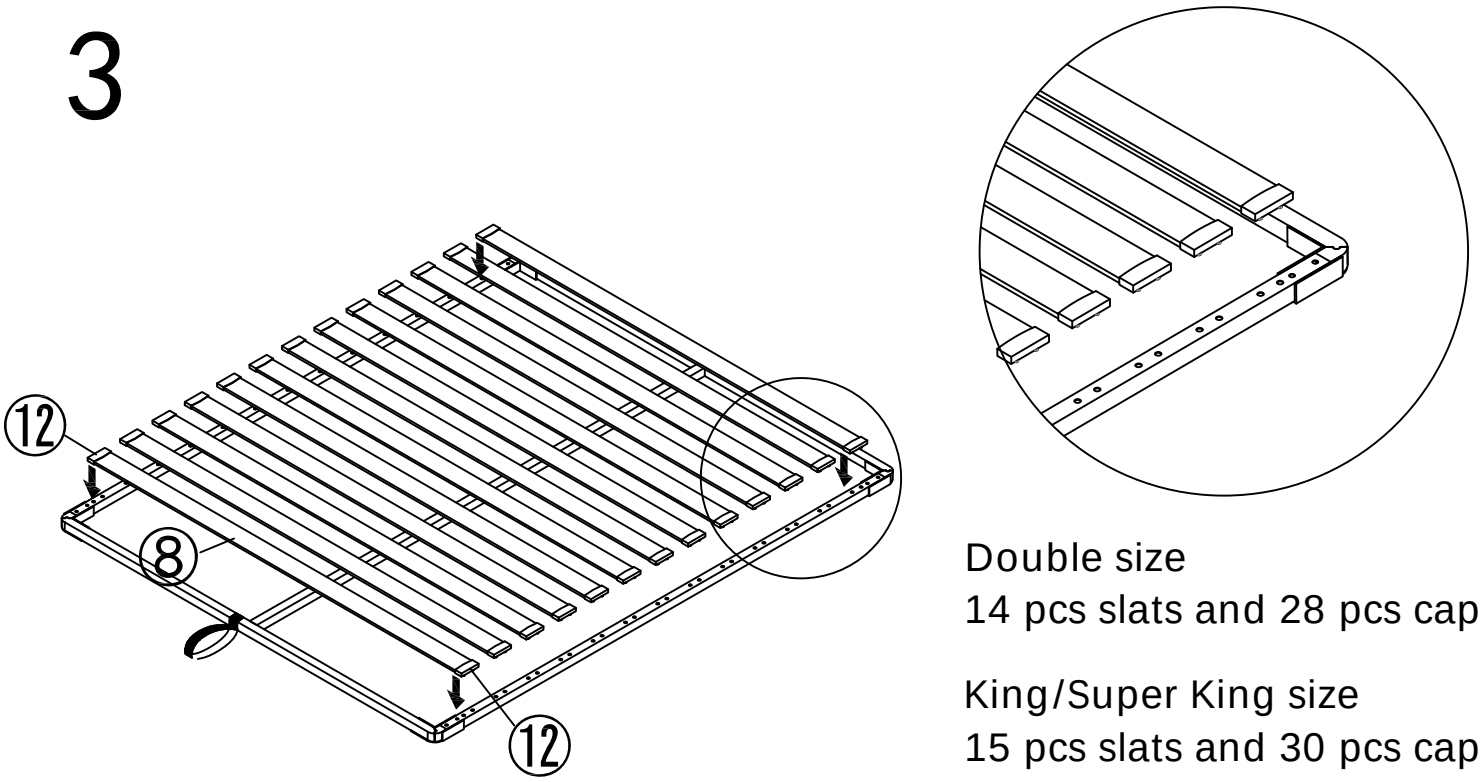

Double size
14 pcs slats and 28 pcs caps

King/Super King size
15 pcs slats and 30 pcs caps

4

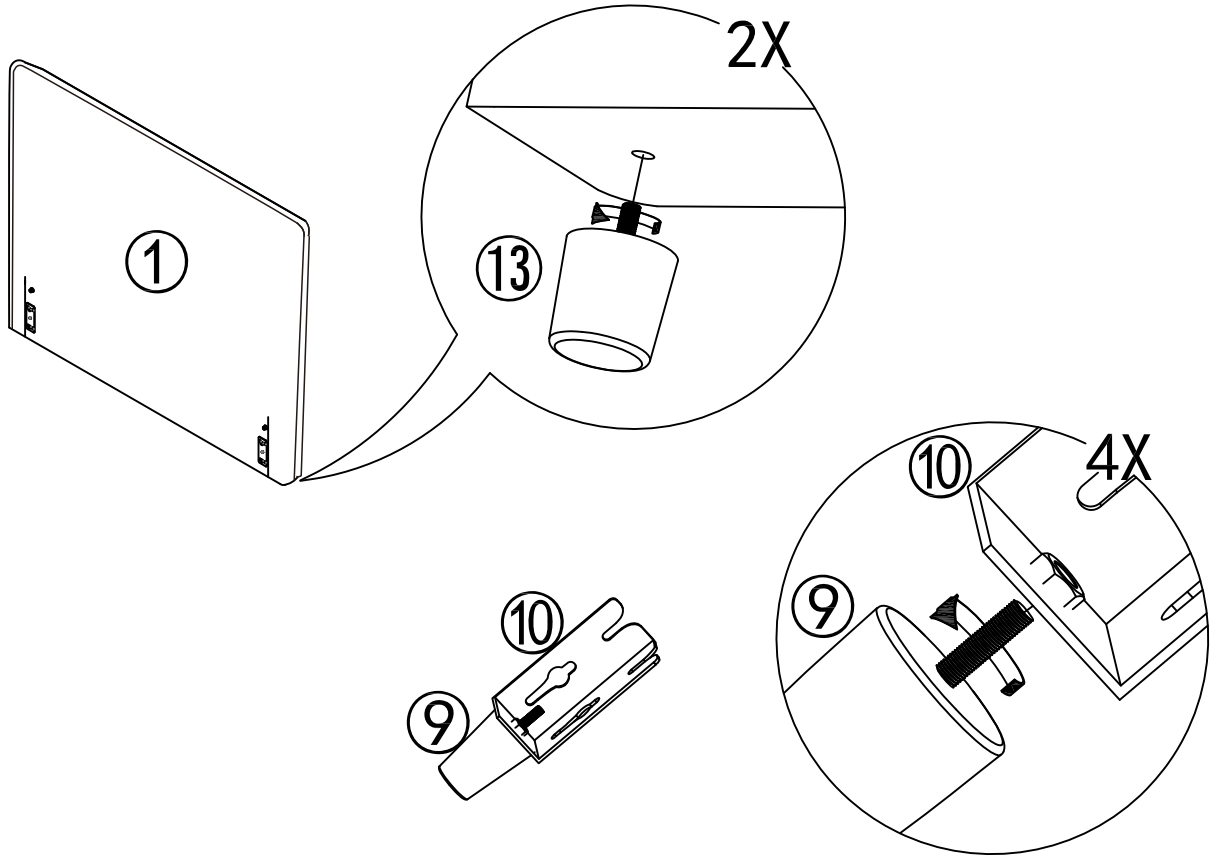

5

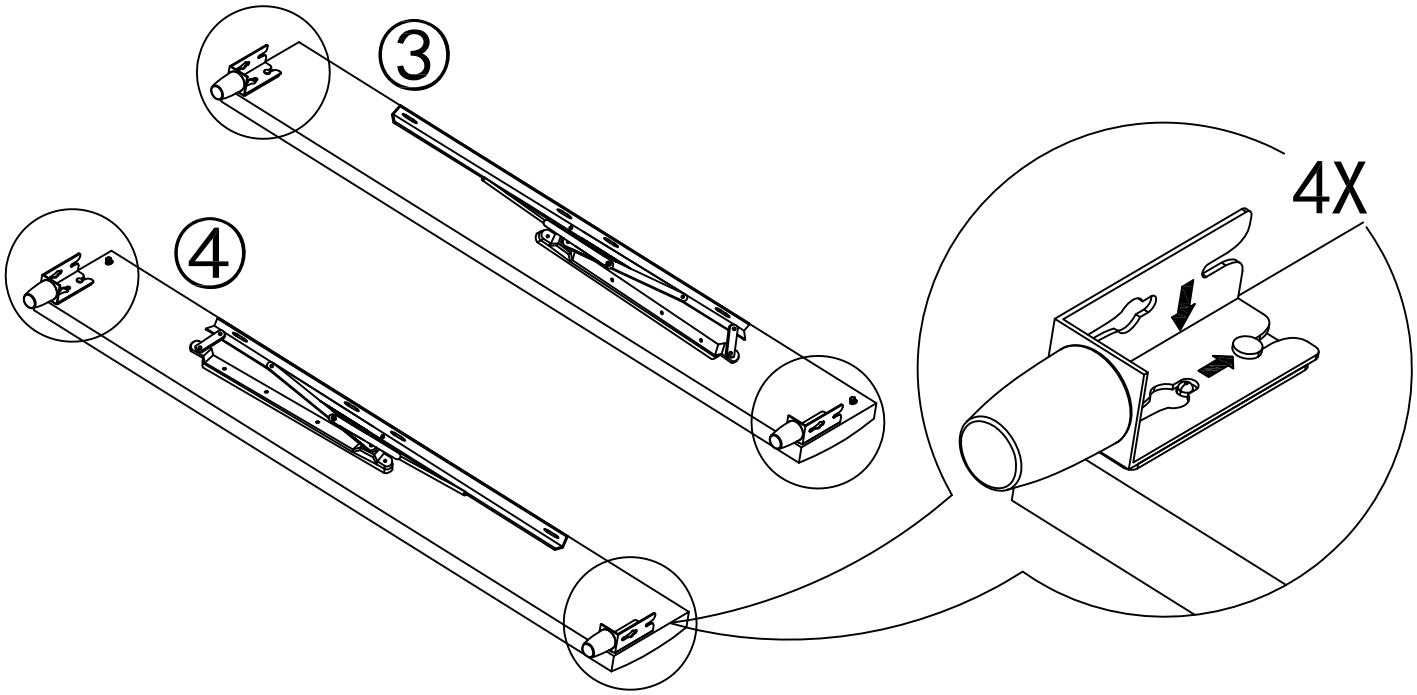

6

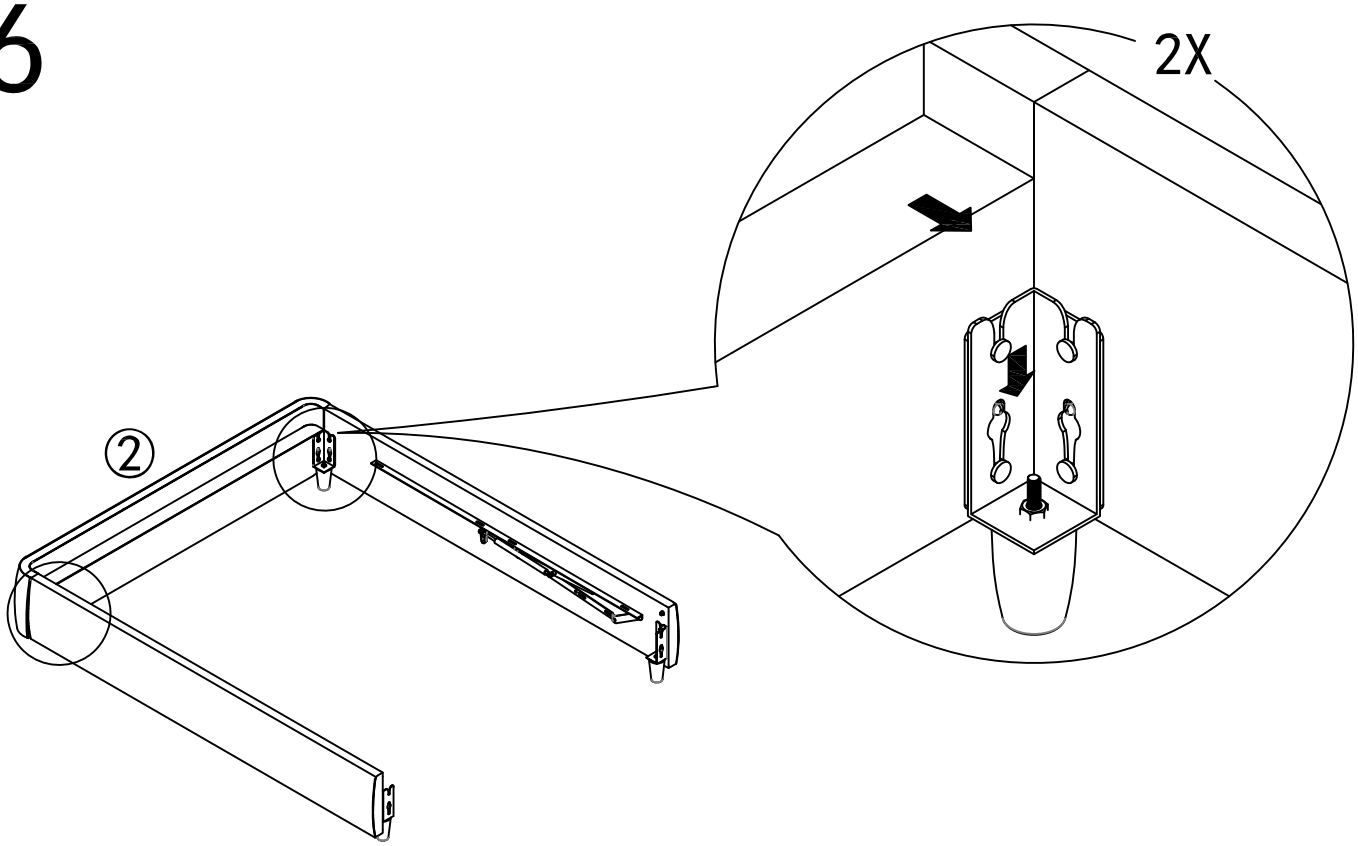

7

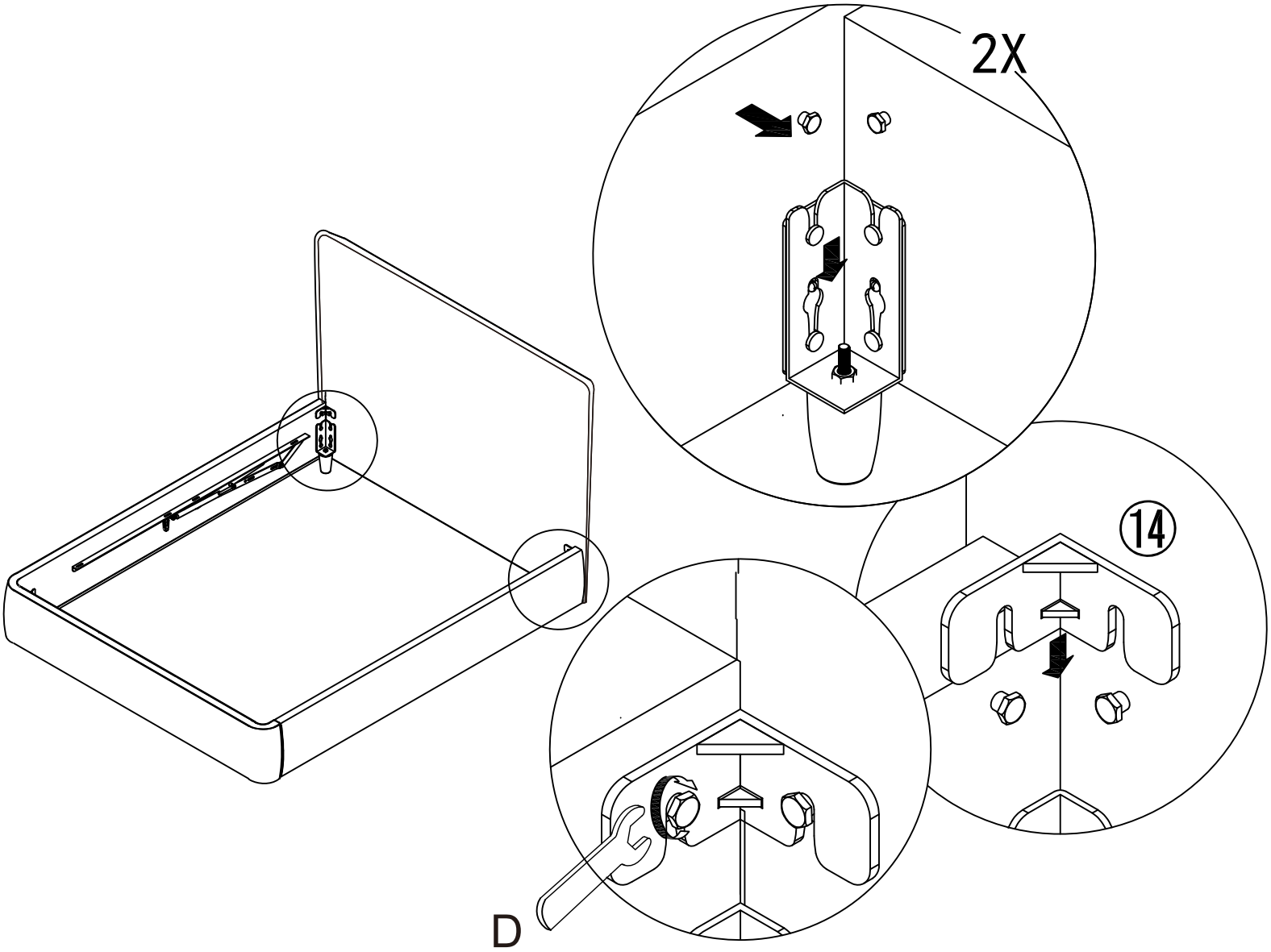

8

We recommend that you check the wing nuts are secure every 3 months.

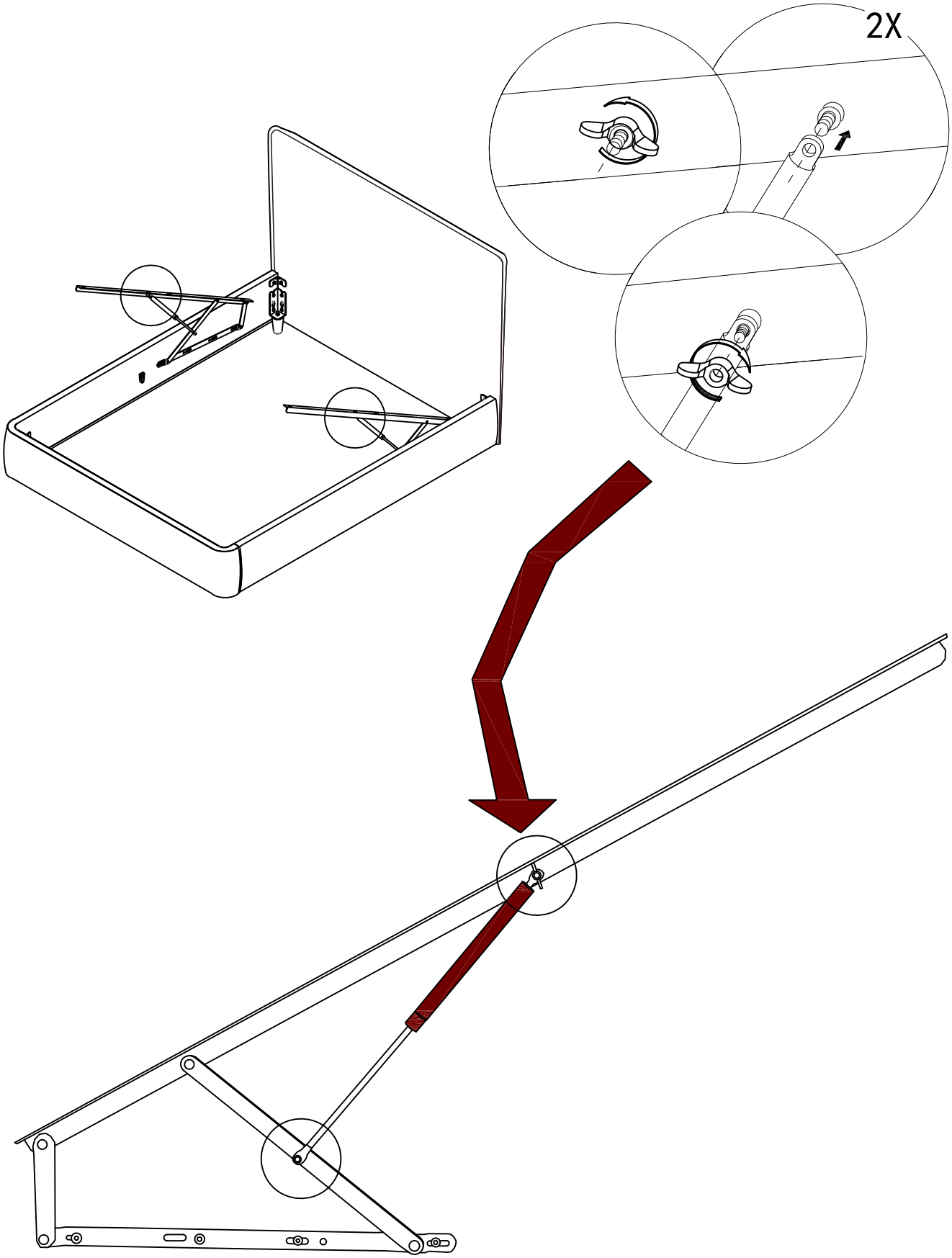

9

Carefully place the assembled slatted frame on to the mechanism arms. Insert and tighten 8 x bolts (A).

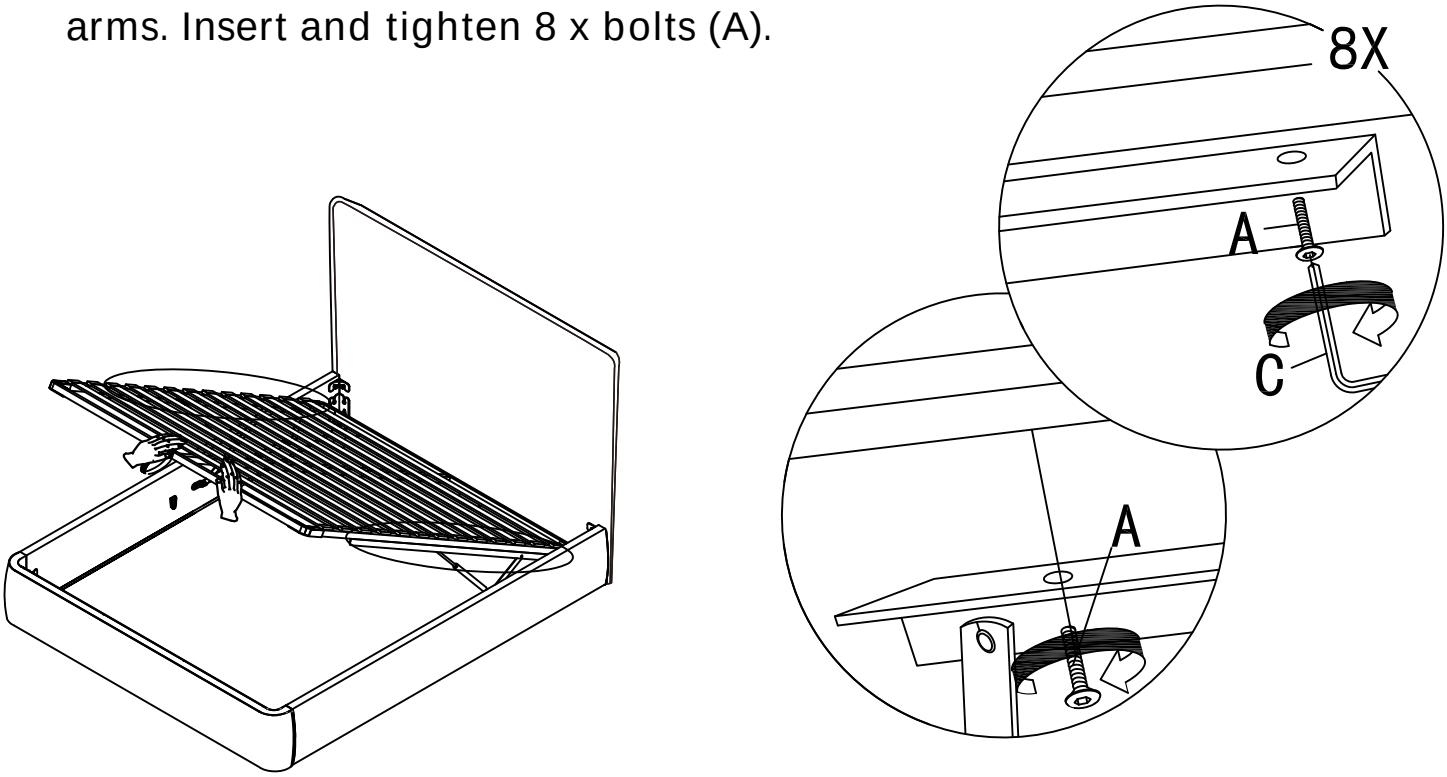

10

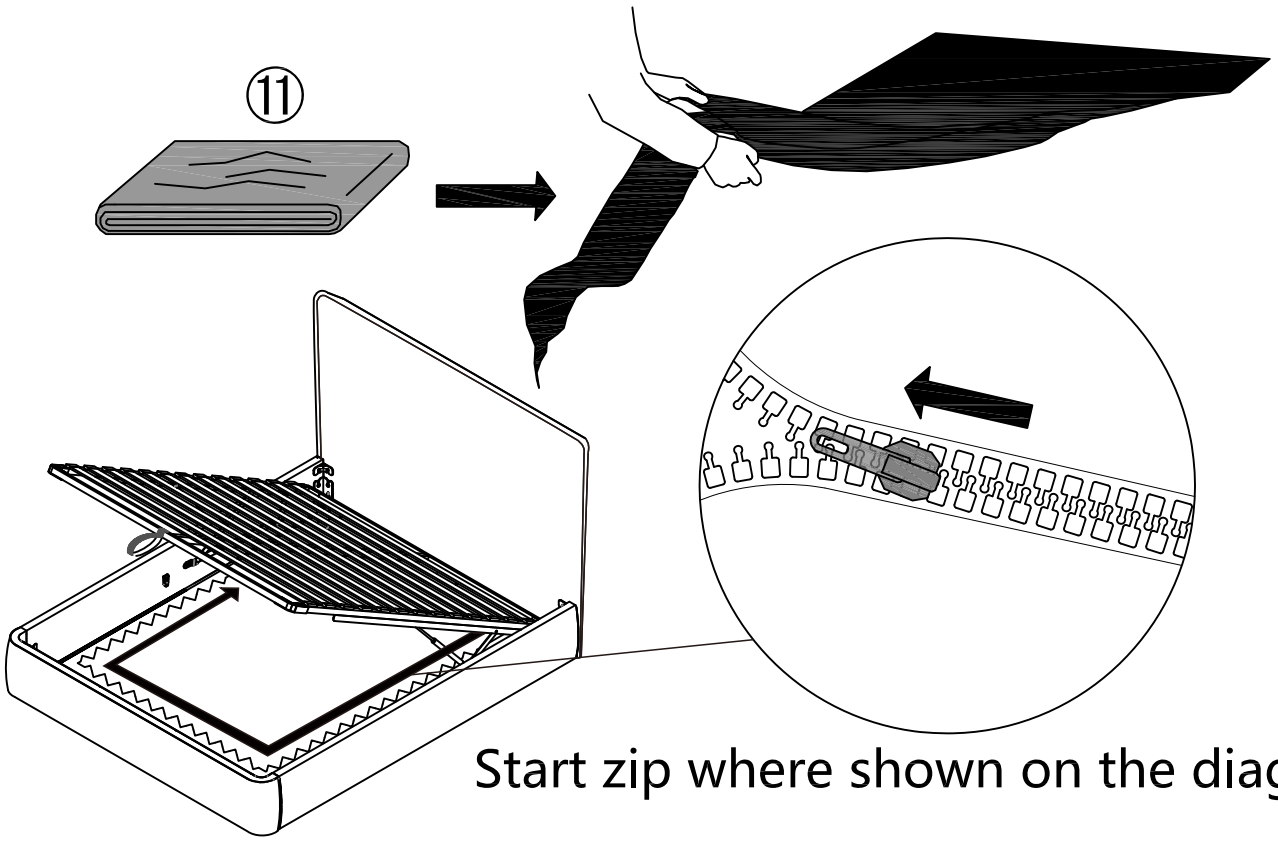

Start zip where shown on the diagram

11

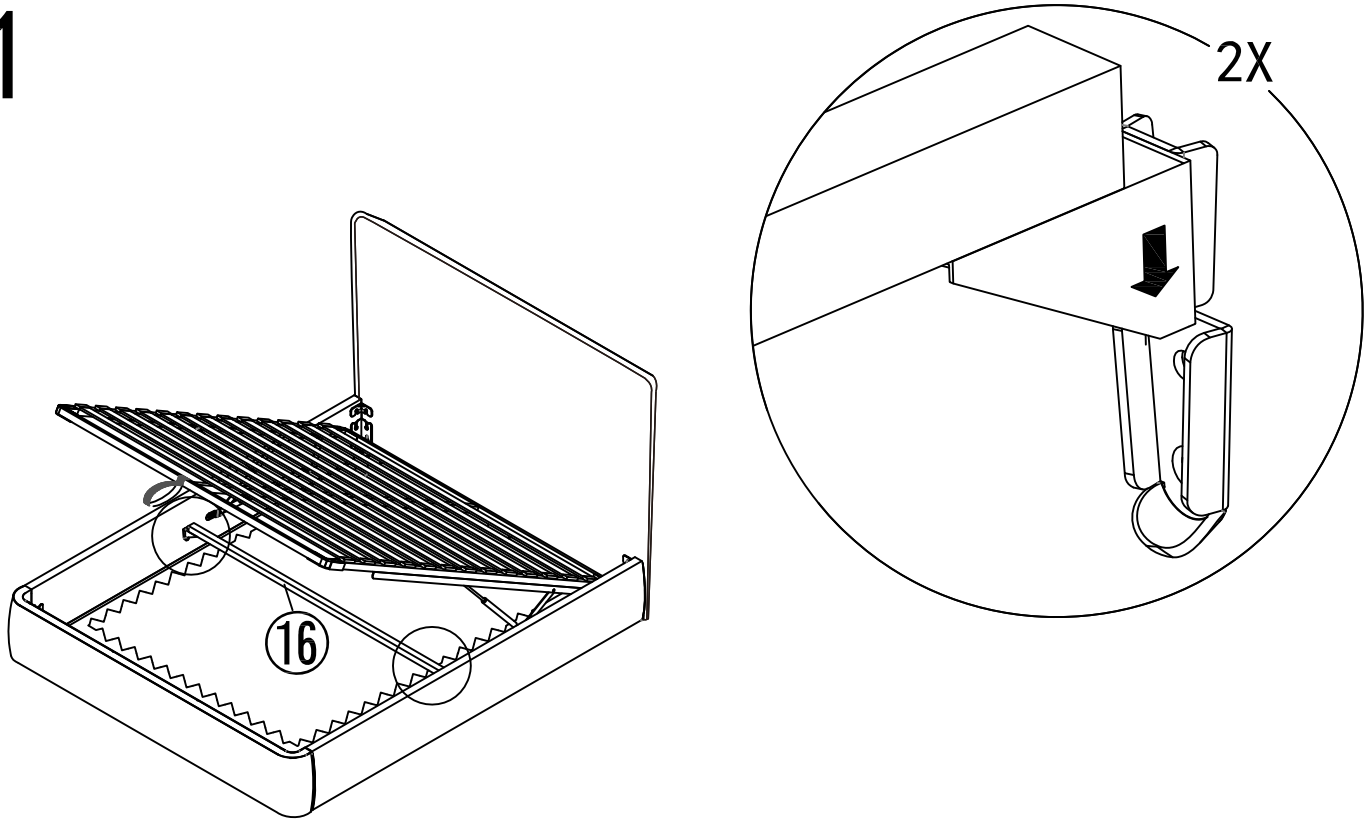
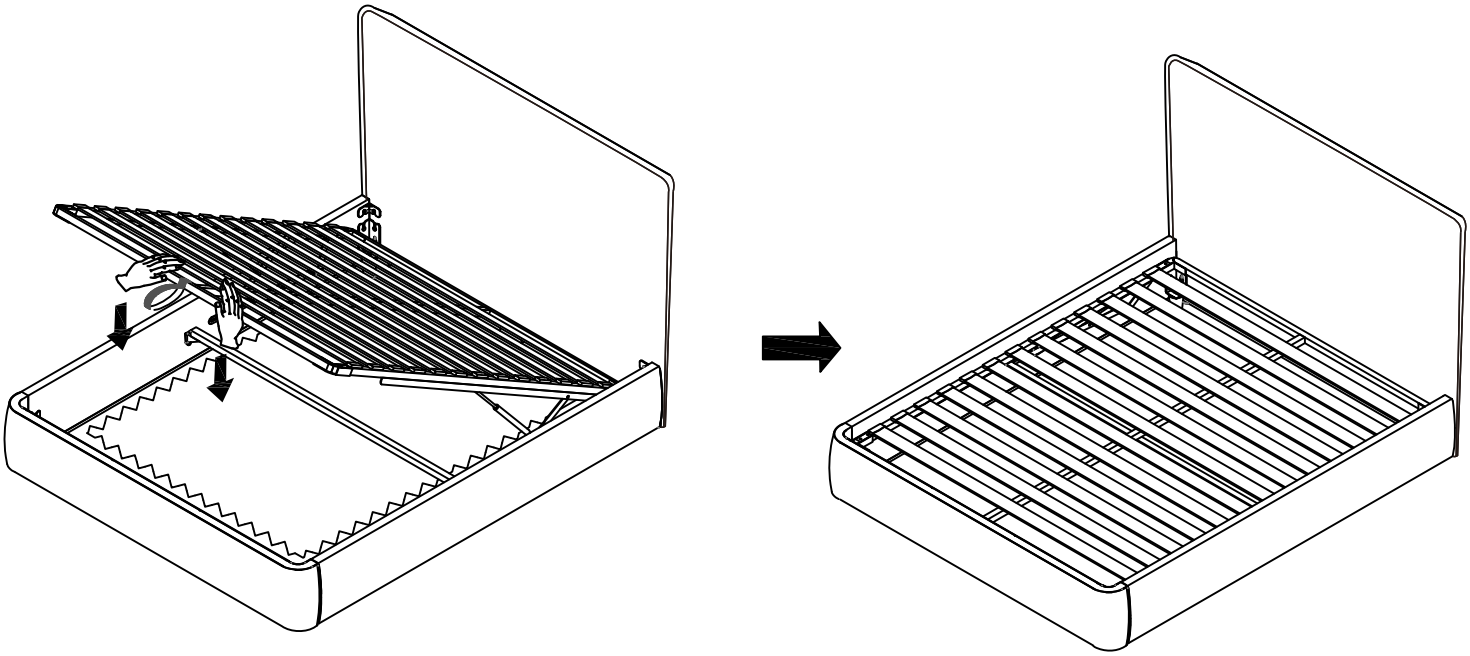
12